DITHERM MTW

+280°C
-70°C

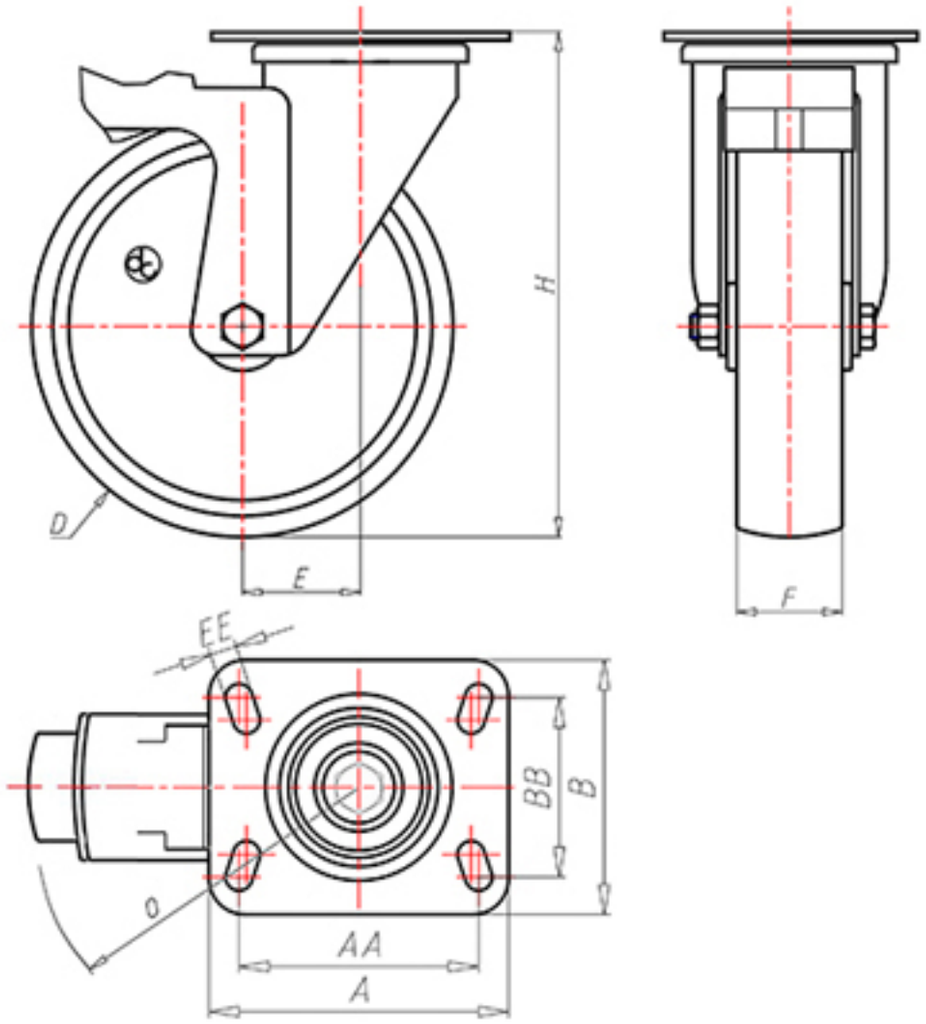

D	150
F	40
H	158
AxB	100x85
AAxBB	80x60
EE	9
E	44
O	124
LC	260

Code for plain bore wheel

SGZ12545PFS

Code for wheel with coated bush

SGZ12545PBRFS

Code for wheel with double BT self-lube bush

–

Code for wheel with double HT ball bearing

–